POS-T COMPARTMENT C130

The perfect solution for frozen food

The POS-T C130 System is a universal pushfeed system developed specifically for the extreme conditions of the frozen food section. Its robust design withstands ice and frost and ensures a high level of flexibility and stability. The unique front attachment withstands even high pressure during replenishment and ensures a long service life.

A permanent front-facing presentation provides clear shopper orientation – this shortens the decision-making process at the point of sale, reduces door opening times, minimises energy loss and helps ensure customer satisfaction.



Frozen vegetables/
Ready-to-eat meals



Cakes and
desserts



Pizzas

Your benefits

- **Better orientation for customers**
  – enhanced product presentation thanks to optimum visibility of large, heavy and even flexible packaging, such as pizzas and frozen meals in cartons and bags
- **Significantly improved tidiness and stability**
  – easy product removal and replenishment ensure an upright, permanent front-facing presentation
- **Simple installation and easy reorganisation**
  in the event of planogram changes
  – just two components for the entire category
- **Positive influence on the cooling system**
  – products presented at the front create a "wall" towards the rear, helping to retain the cold when the door is open. Optimum visibility and clear orientation for customers reduce door-opening times.
- **Perfectly adaptable to different refrigeration equipment**
  – available in black or white



Compartment C130 in detail

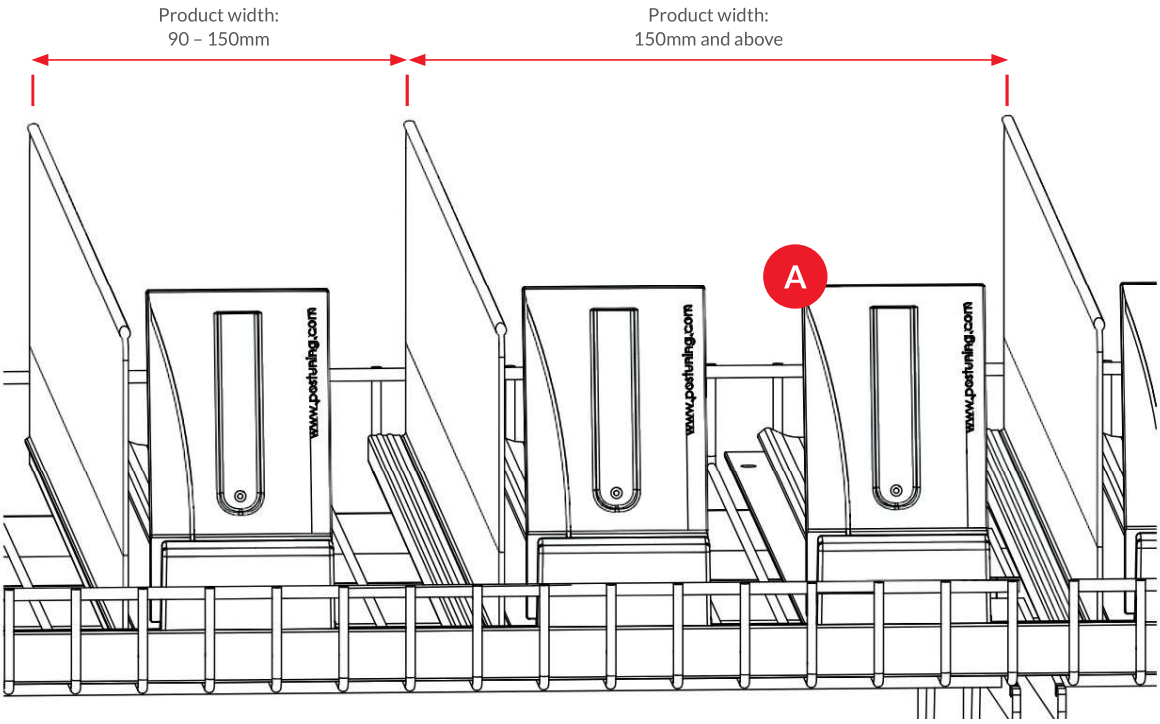

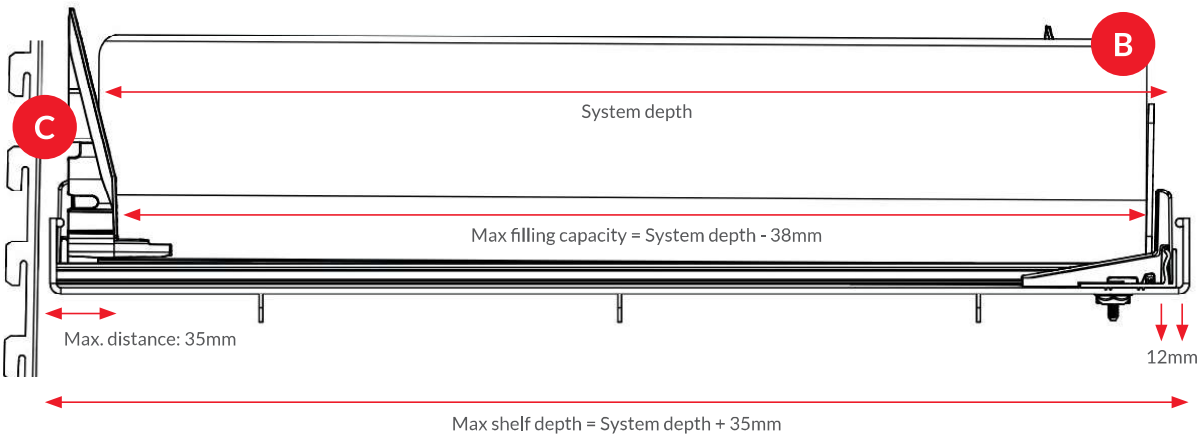



A For all product widths from 90mm. An additional pushfeed is used for product widths above 150mm (for instance for pizzas or bagged goods).

B Between 15mm and 45mm must be deducted from the usable shelf depth to the back wall to ensure the correct length of L-profiles and add-on pushfeed guiderails (see also point C).

C **NOTE:** The C130 deep-freeze system has no rear stop for the pushfeed.
Therefore, the system must be positioned no more than 35 mm from the back wall.
Alternatively, a rear front anchor must be installed.

POSTUNING®
a Voßhenrich company

Pushfeed Systems
Compartment C130

Adapter-T Rails for freezer metal shelves

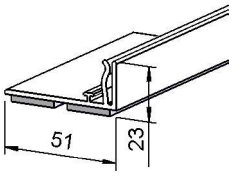

Adapter-T Rail A049 with upper bend, magnetic

Adapter-T Rail A049, specially designed for freezer metal shelves. The 23mm upper bend combined with a black magnetic strip provides secure hold and stability. Easy to remove and reposition for cleaning, offering flexible handling. Ideal for demanding conditions.

Colour	Length mm	Shelf width mm	Height mm	PU	Item No.
black	758	770	23	15	30004936
white	758	770	23	15	30004954

Other measurements upon request.

Adapter-T Rails for freezer wire shelves

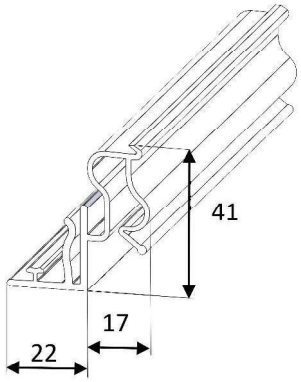

Adapter-T Rail A056, to plug onto

Height 41mm. With slot for Compartment C130. For the installation on double wire front shelves with upper bend. **A056 in length 758mm** is suitable for deep freezer wire shelves of Bonnet (Ampleo, Pantheon II), Hussmann (T-RL Impact), Kaplanlar (Amatis), Linde (AGB, Velando).

Colour	Length mm	Shelf width mm	Height mm	PU	Item No.
black	758	770	41	10	30009888
white	758	770	41	10	30009886

Other measurements upon request.

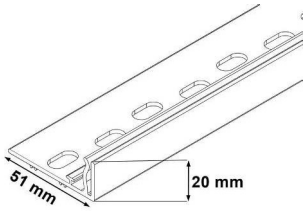

Adapter-T Rail A049 with upper bend, to screw on

Adapter-T Rail A049, versatile adapter rail with 20 mm upper bend for wire shelves. Freezer-safe, ideal for cold storage areas. Firmly screwed for stable and durable fixation.

Colour	Length mm	Shelf width mm	Height mm	PU	Item No.
black	758	770	20	16	30012930
white	758	770	20	16	30012929

Other measurements upon request.

For product widths from 90 till 150mm

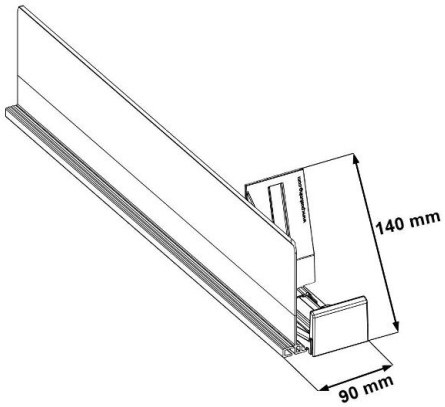

C130 L-Profile with pre-assembled Pushfeed

The C130 L-Profile with Pushfeed is supplied as a **pre-assembled unit**. The C130 L-Profile serves as both a divider and a guiderail, supporting organized product guidance on the shelf.

With a width of 90mm and a height of 140mm, it forms the structural basis of the system. The inclined C130 Pushfeed measures 68mm in width and 132mm in height and operates with a pushfeed force of 11–19N. The unit is suitable for use in **refrigerated shelves and freezers**.

CAUTION: Max. shelf depth = System depth + 35mm

Colour	System depth mm	Length mm	Height mm	Force Newton	PU	Item No.
black	480	465	140	11-19	10	30014516
black	530	515	140	11-19	10	30014519
black	555	540	140	11-19	10	30014521
black	580	565	140	11-19	10	30014448

For product widths from 150mm and more

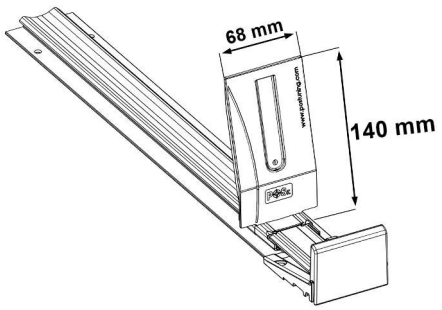

C130 Add-on Pushfeed Guiderail with pre-assembled Pushfeed

The C130 add-on pushfeed guiderail with pre-assembled pushfeed is designed for use in freezer shelving. It serves as an extension to the C130 L-profile with pre-assembled pushfeed and is **mandatory** for **product widths of 150 mm and above.**

The unit has a height of 140mm, while the add-on pushfeed guiderail has a width of 60mm. The integrated pushfeed with inclined backplate and front stop features a width of 68mm, a height of 132mm, and a pushfeed force of 11–19N. The front stop is 52mm high and 65mm wide.

CAUTION: Max. shelf depth = System depth + 35mm

Colour	System depth mm	Length mm	Height mm	Force Newton	PU	Item No.
black	480	444	140	11-19	10	30014518
black	530	494	140	11-19	10	30014520
black	555	519	140	11-19	10	30014522
black	580	544	140	11-19	10	30014449

Pushfeed Systems
Compartment C130

End divider

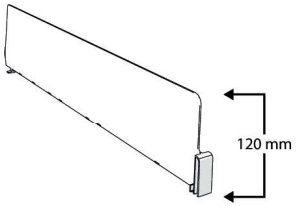

End divider D130, with front fixation, height 120mm, transparent

The end divider for wire shelves serves as the right end element in an array of C130 pushfeeds on a shelf. It is available in various lengths to match with the Compartment 130-profiles.

Colour	Length mm	Height mm	PU	Item No.
transparent	430	120	68	30006699
transparent	480	120	68	30006701
transparent	530	120	68	30006703

Accessories

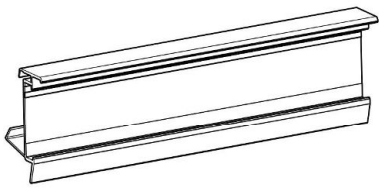

ESL05 profile 1-fold, for shelves with U-Profile

Suitable for SES-Imagotag label series VUSION. For **Adapter-T Rail A056** and shelves of the manufacturers **Linde, Carrier and JBG2**. ESL size 1,5 - 7,4".

Colour	Length mm	Height mm	PU	Item No.
antracite	758	44	45	30010852
white	758	44	45	30010851

Other colours upon request.



Scanning rail TE 39, slide-in height 39mm, for clamping , transparent

Suitable for labels with a height of 39mm. To be clamped onto Tegometall, Eden and Mago shelves.

Colour	Length mm	PU	Item No.
transparent	758	100	30014138

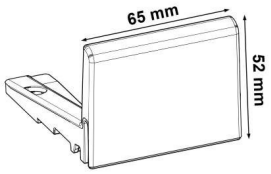

Front anchor for C130, width 65mm, height 52mm, depth + 10mm, transparent

Is required as an end stop for L-Profiles C130 and add-on pushfeed guiderail C002 on shelves with a system depth of 590mm and more.

Colour	Dimensions WxDxH mm	PU	Item No.
transparent	65x10x52	24	30012610

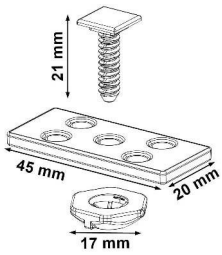

Plastic mounting elements for Adapter-T Rails A049 and A051 on wire shelves

Mounting element consisting of:
Plastic mounting set including 20 fixing plates, screws, and nuts in a PE bag. Designed for tool-free installation of Adapter-T Rails A049 and A051 on wire shelves. Use at least 3 pieces per meter for proper stability.

Colour	PU	Item No.
transparent	1	30011851



Metal mounting elements for Adapter-T Rails A049 and A051

This metal set includes 25 mounting plates, screws, and an Allen key in a PE bag. It is designed for securely fixing Adapter-T Rails A049 and A051 to wire shelves. Ensure the use of at least 3 pieces per meter for stable attachment.

Details	PU	Item No.
metal, silver	1	30001395