POS-T SUPERVARIO

One system. Endless possibilities. Maximum flexibility.

One solution for perfect beverage presentation

Whether bottles are small or large, or cans are slim or wide – the POS-T SuperVario adapts flexibly to a wide range of beverage formats, ensuring a perfect front-facing presentation at all times.

The width can be adjusted quickly and tool-free from 53 to 97mm with just one finger. This makes range and planogram changes particularly easy and efficient to implement. At the same time, the system offers maximum flexibility – including in depth.

With the Slowmotion version (SloMo), glass bottles are guided gently and smoothly to the front of the shelf – for a premium, high-impact presentation that helps drive sales.

Another highlight: Thanks to innovative side supports, the POS-T SuperVario can quickly be converted into a doublestack solution for cans. This creates up to 44% more facings, a wider product range and a space-saving presentation designed to attract maximum attention at the point of sale.



Your benefits

- Products are always visible, accessible and neatly organised
- More focus on your brand: suitable for communication and branding
- Save time on shelf replenishment with automatic pushfeed
- Fully flexible: suitable for all products and shelf dimensions
- Easily converted into a doublestack solution: more facings and greater product variety
- Slimline design for maximum capacity
- Easy to install and effortless to adjust



*when presenting beverage cans

Beverage solutions



POS-T SuperVario
2 – 9 Newton

- Cans (0.25 to 0.5 litres), glass bottles (up to 0.33 litres), PET bottles (up to 1 litre)
- Ambient and chilled areas



POS-T SuperVario SloMo
10 – 14 Newton

- Wine and sparkling wine bottles
- Ambient areas



POS-T SuperVario SloMo
10 – 18 Newton

- Glass bottles (e.g. soft drinks and beer, from 0.5 litres)
- Chilled areas

POS TUNING®
a Voßkenrich company

POS-T SuperVario in detail

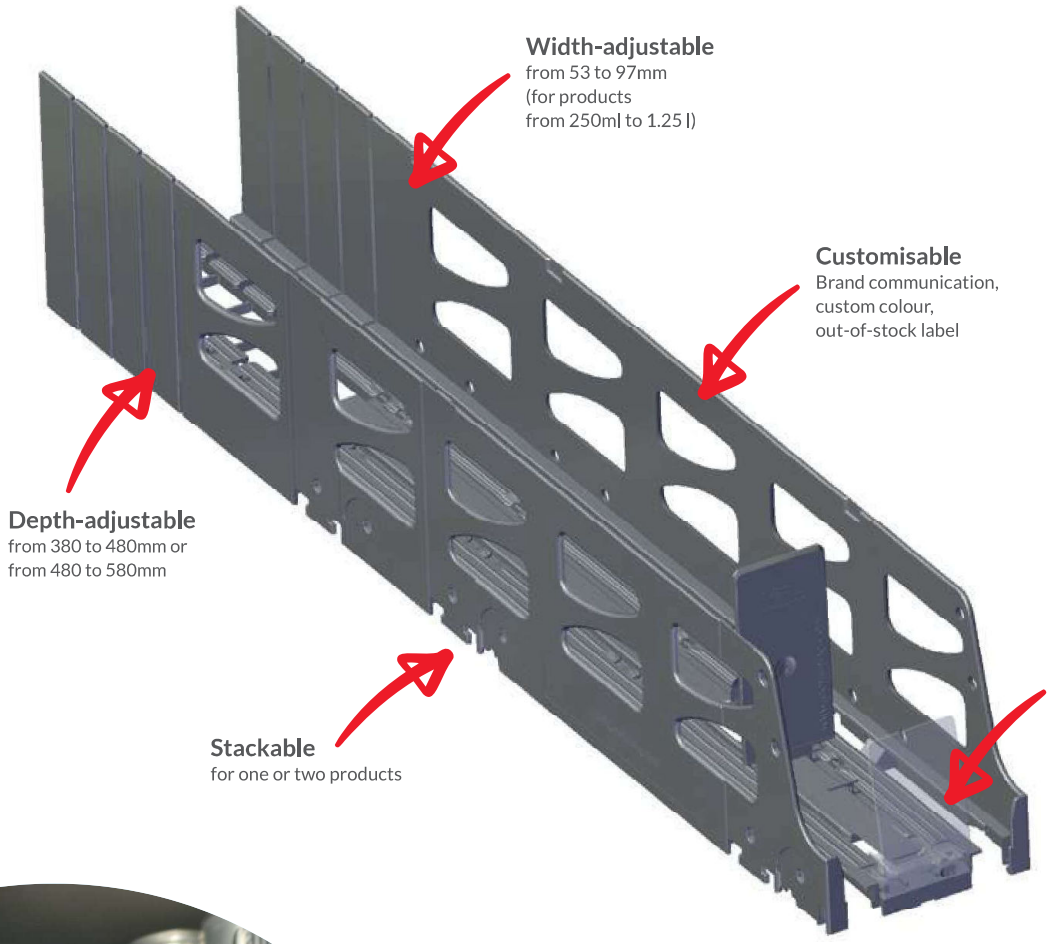



The doublestack solution for double the impact

With innovative side supports, the POS-T SuperVario can be easily upgraded to a doublestack solution, enabling up to 44% more facings.

Products are stacked efficiently to save space and presented at the point of sale to maximum effect.

POS-T supports are available in a range of sizes to suit different product formats. For 0.25, 0.33 and 0.5 litre cans, support heights from 140 to 200mm are available.

Depending on the version, they are suitable for products approximately 115 to 175mm high and achieve overall heights of 270 to 380mm.

POS-T SUPERVARIO PURE

The perfect double stack solution for health & beauty retail

The POS-T SuperVario Pure brings transparency and lightness to the health & beauty sector. Its translucent design presents products clearly and with maximum sales impact, while giving shelving a modern, premium look.



The POS-T SuperVario Pure is suitable for products measuring 60 to 106mm in width and provides space in the lower section for products up to 90mm high. This makes the system ideal for face and hand creams, hair treatments in tubs and jars, as well as a wide range of boxed products.

The open design creates clarity, brightness and a neat overall appearance at the point of sale – without distracting from the products themselves. This results in clear shelf structures, improved orientation for shoppers and a presentation designed to encourage purchase decisions.

The double stack design creates more facings and additional space savings – ideal for presenting a wide variety of products efficiently and in a space-saving way on the shelf.

The result: a bright, welcoming product presentation that inspires confidence and makes shopping more enjoyable and intuitive.



POS TUNING
a Vossenrich company

Pushfeed Systems
SuperVario

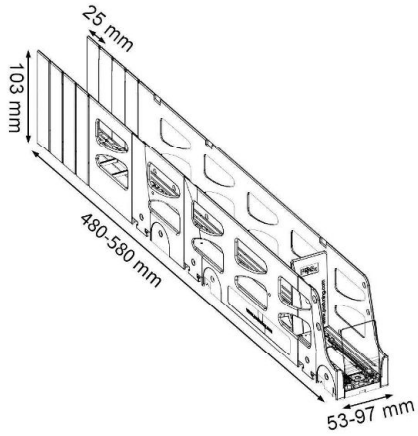

POS-T SuperVario for beverages cans and PET bottles

The POS-*T* SuperVario is designed for **beverage presentation in retail** and is suitable for **PET-bottles and cans**. The continuously **adjustable width from 53 to 97mm** allows adaptation to different packaging sizes from **250ml to 1l**.

The system is depth-variable and can be shortened for **shelf depths from 380 to 580 mm**. **Tool-free installation** simplifies mounting and supports fast planogram changes. High stability and reliable product guidance ensure an orderly product presentation.

Recommendation: We recommend the A003 Adapter-T Rail in the required mounting versions.

Colour	Length mm	Height mm	Force Newton	PU	Item No.
antracite	380-480	103	2-9	10	30014159
antracite	480-580	103	2-9	10	30014160

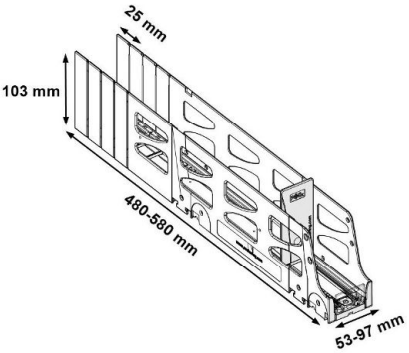

POS-T SuperVario Slomo for wine and spirits in the dry goods section

The POS-*T* SuperVario Slomo is designed for beverage **presentation** in retail and is suitable for **wine bottles and spirits in the dry goods section**. The continuously **adjustable width from 53 to 97mm** allows adaptation to different bottle sizes. The system is depth-variable and can be shortened for **shelf depths from 380 to 580 mm**. The damped pushfeed ensures that products move forward evenly, maintaining a tidy display at all times. **Tool-free installation** simplifies mounting and supports fast planogram changes. High stability and reliable product guidance ensure an orderly product presentation.

Recommendation: We recommend the A003 Adapter-T Rail in the required mounting versions.

Colour	Length mm	Height mm	Force Newton	PU	Item No.
antracite	380-480	103	10-14	10	30014148
antracite	480-580	103	10-14	10	30014149

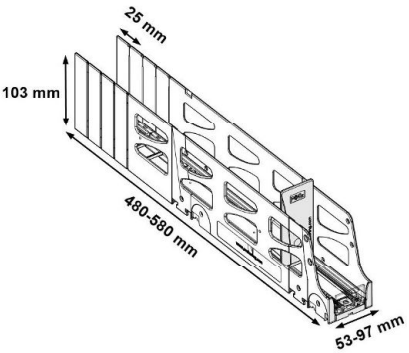

POS-T SuperVario Slomo for glass bottles from 0.5 l in refrigerated areas

The POS-*T* SuperVario Slomo is ideally suited for the presentation of **glass bottles from 0.5 l in refrigerated areas.**The continuously **adjustable width from 53 to 97mm** allows adaptation to different bottle sizes. The system is depth-variable and can be shortened for **shelf depths from 380 to 580mm**. The damped pushfeed ensures that products are moved forward evenly, maintaining a tidy display at all times. **Tool-free installation** simplifies mounting and supports fast planogram changes. High stability and reliable product guidance ensure an orderly product presentation.

Recommendation: We recommend the A003 Adapter-T Rail in the required mounting versions.

Colour	Length mm	Height mm	Force Newton	PU	Item No.
antracite	380-480	103	10-18	10	30014497
antracite	480-580	103	10-18	10	30014498

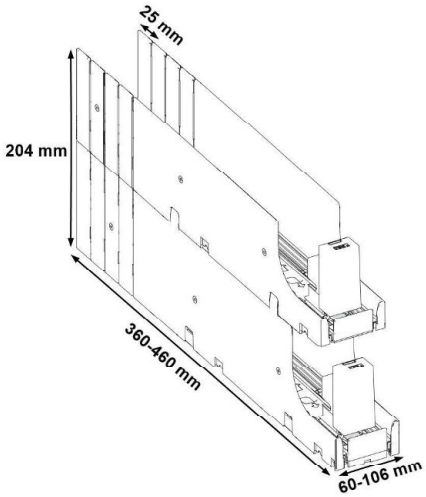

POS-T SuperVario Pure for drugstore products

The POS-*T* SuperVario Pure doublestack presenter is a space-saving and sales-promoting product presentation in the **drugstore sector**. Two **transparent** levels provide high product visibility and optimal shelf utilization. The width is continuously adjustable from **60 to 106mm**, allowing flexible adaptation to different packaging sizes. The integrated pushfeed ensures a neat front presentation at all times. The presenter features variable depth adjustment and can be shortened for shelf depths from **360 to 460mm**. Products on the lower level must not exceed a **maximum height of 90mm**. Its robust construction ensures stable product guidance and quick installation.

Recommendation: We recommend the A003 Adapter-T Rail in the required mounting versions.

Colour	Length mm	Height mm	Force Newton	PU	Item No.
transparent	360-460	204	2-6	6	30014641

Accessories

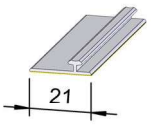

Adapter-T Rail A003 with adhesive tape, transparent

Universally applicable. Removable without residue. With white adhesive tape.

Colour	Shelf width mm	Length mm	Width mm	PU	Item No.
transparent	1,000	995	21	50	30008357
transparent	1,250	1,245	21	50	30008362

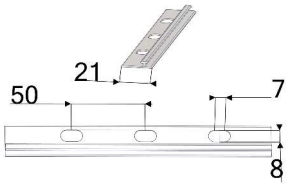

Adapter-T Rail A003, to clip on, transparent

Fasteners are included in the delivery for the fixation on the wire shelves. For the fixation of the Adapter-T Rail, the fasteners are clipped through the punched holes onto the wire shelf. Compatible with wire shelves with a diameter of 2,0 to 3,4mm.

Colour	Details	Shelf width mm	Length mm	Width mm	PU	Item No.
transparent	with 4 clips	900	890	21	1	30002609
transparent	with 4 clips	1,000	990	21	1	30002611
transparent	with 5 clips	1,250	1,240	21	40	30002613
transparent	with 5 clips	1,330	1,320	21	1	30002616

Other measurements upon request.

Pushfeed Systems
SuperVario

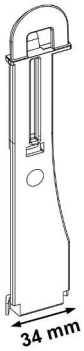

POS-T SuperVario pillar

The transparent pillar for POS-*T* SuperVario for beverages is designed for spacing and stabilization in double-stack presentations. Four pillars are required for an additional level.

Colour	Width mm	Height mm	PU	Item No.
transparent	34	140	20	30013260
transparent	34	160	20	30013259
transparent	34	170	20	30013828
transparent	34	200	20	30013832



POS-T SuperVario Labelholder E049

The transparent labelholder for the POS-*T* SuperVario can be easily attached on the pushfeed and ensures clean, highly visible communication directly at the product. Suitable for label widths of 49mm.

The 85mm height version is specifically designed for use with the POS-*T* SuperVario for beverage cans and PET bottles. A 102mm height version is available for the POS-*T* SuperVario Slomo variants.

Colour	Width mm	Height mm	PU	Item No.
transparent	51	85	100	30014605
transparent	51	102	100	30014604

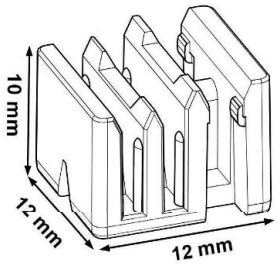

POS-T SuperVario clip

The connection clip enables tool-free assembly of two POS-*T* SuperVario channels for beverages, ensuring a secure fit and a neat finish on both sides. Installation is not strictly necessary, but if there are no side panels, the clip prevents the POS-*T* SuperVario channels from falling out the sides.

Colour	Dimensions WxDxH mm	PU	Item No.
antracite	12x12x10	20	30013119